COMMERCIAL WALL-MOUNT DOOR REVERSAL

CableTalk® Systems Inc.

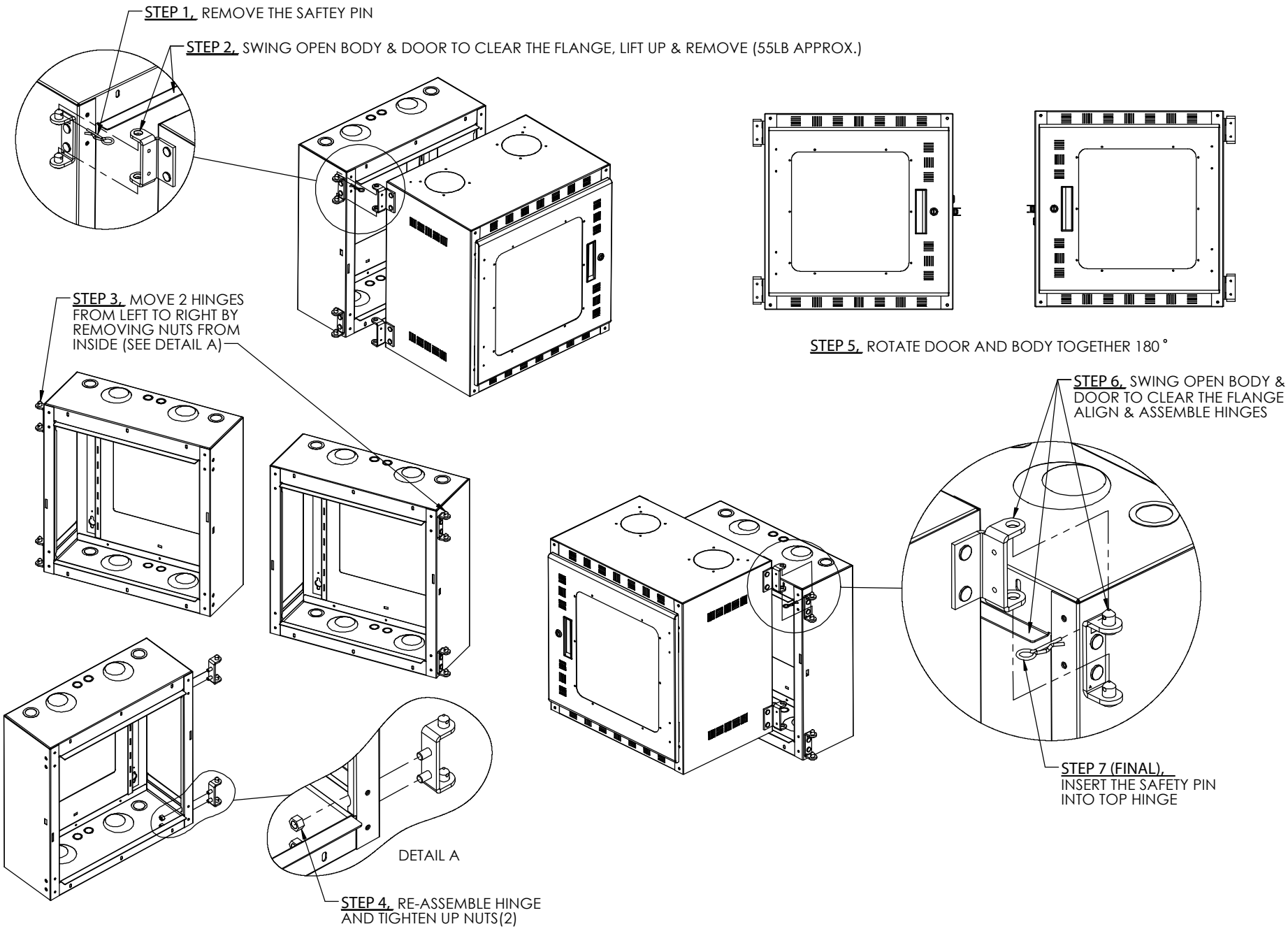

CTCWH-DSO-FAMILY