CableTalk
Custom Data Center Solutions

COMMERCIAL WALL-MOUNT DOOR REVERSAL

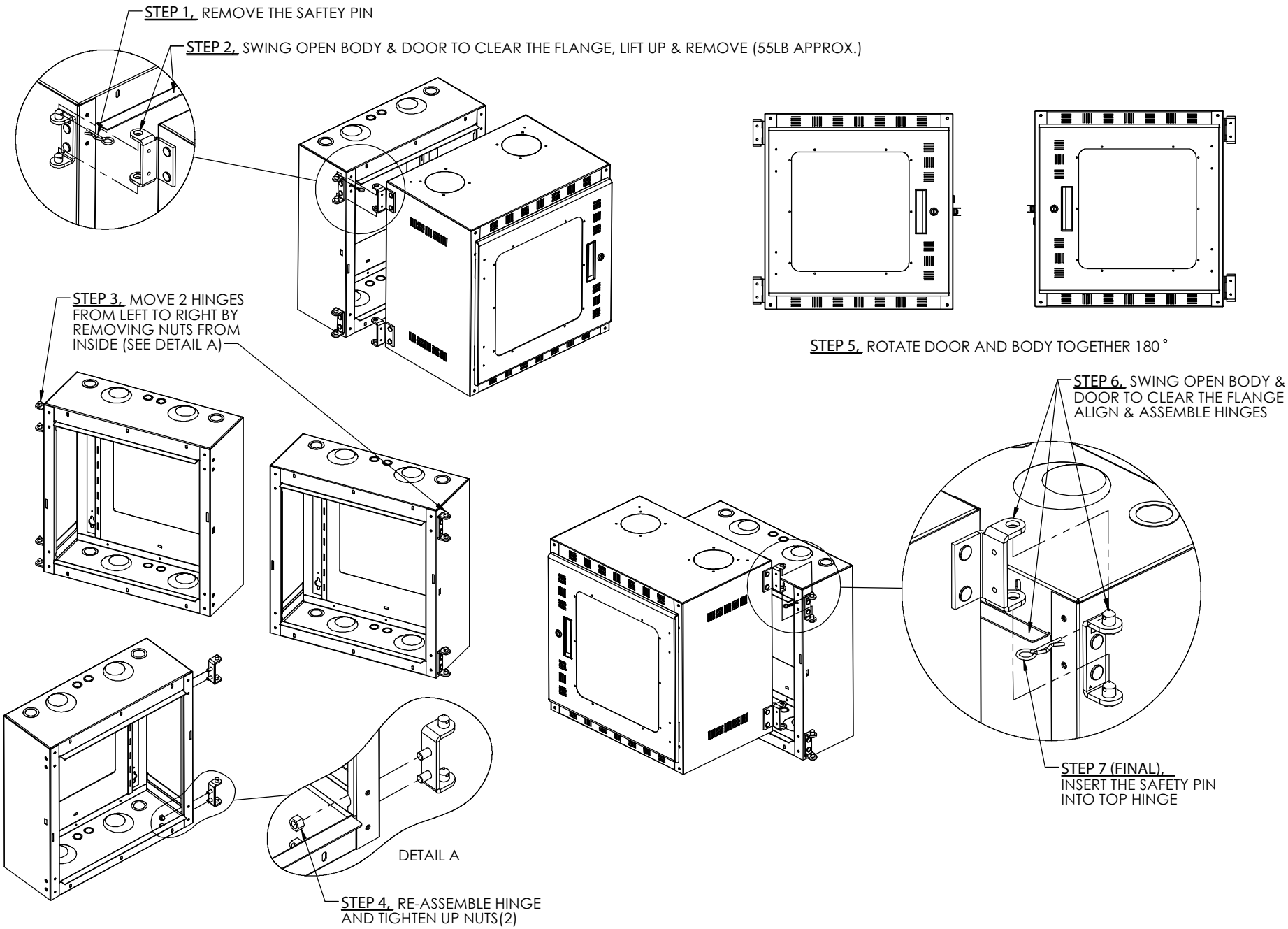

CTCWH-DSO-FAMILY