Wall Mount - Industrial Cabinet

Systèmes CableTalk® Systems Inc.

Product Features

Finish

- Durable black textured powder paint finish

Structure

- Frame constructed of 13 GA (0.090") and 16GA (0.060") steel, fully welded and rigid
- Industrial wall mount cabinets are ideal for small and medium sized networks, and are designed for harsh conditions such as manufacturing facilities
- All cabinets come standard with tinted Lexan-windowed door
- Hinged body for rear access
- Vertical cable management system included
- Built-in 19" EIA standard 10-32 tapped mounting angles
- Pad-lockable doors standard
- Pad-lockable front and back compartments
- Reversible swing with replacement hinges. Factory default to left-hand swing

Options

- Available in 11 U-space or 23 U-space
- Gasketing for NEMA/Harsh environment applications available. Gasketing is 1 piece extruded neoprene, attached by 3M heat sensitive adhesive
- Flush-style key lockable doors available front and rear
- Fans for thermal load management available. Optional filter kit is recommended

UL LISTED ITT Equipment Enclosure 2CF7

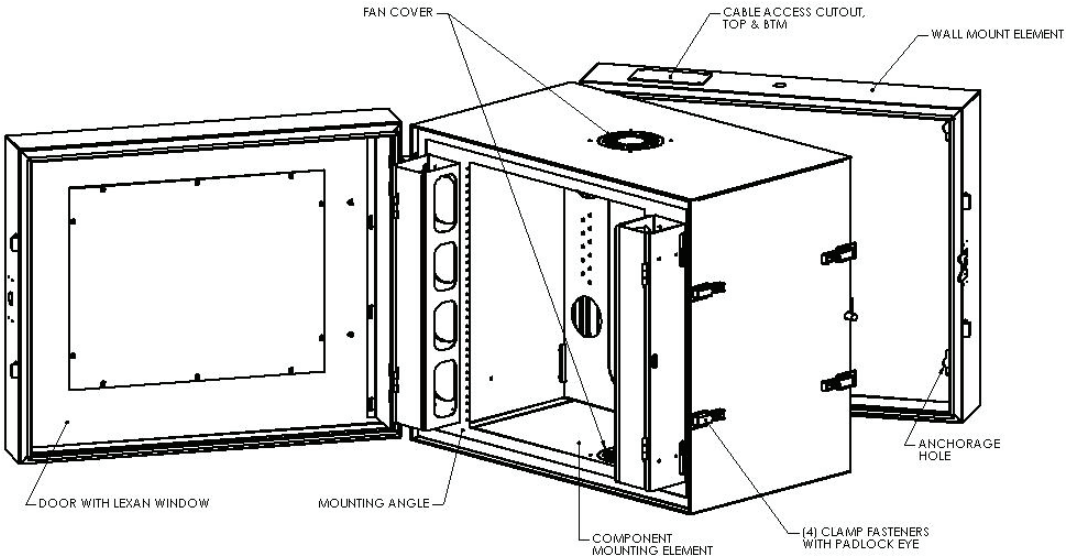

Wall Mount - Industrial Cabinet

Systèmes CableTalk® Systems Inc.

Standard Dimensions

Industrial Wall Mount Cabinets

Part No.	Overall Width (Inches)	Overall Depth (Inches)	Usable Depth (Inches)	Overall Height (Inches)	Height (U-space)	Load Rating
CTCWH-2128-DDSO-B	28.5	25.5	20.5	23.5	11 U	150
CTCWH-4428-DDSO-B	28.5	25.5	20.5	44.5	23 U	200

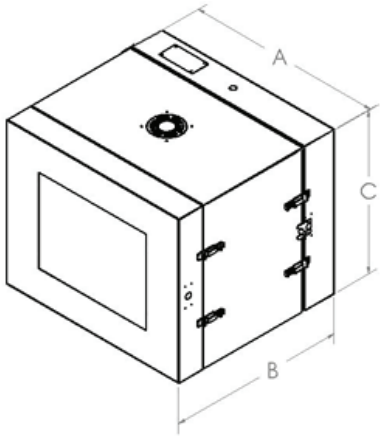

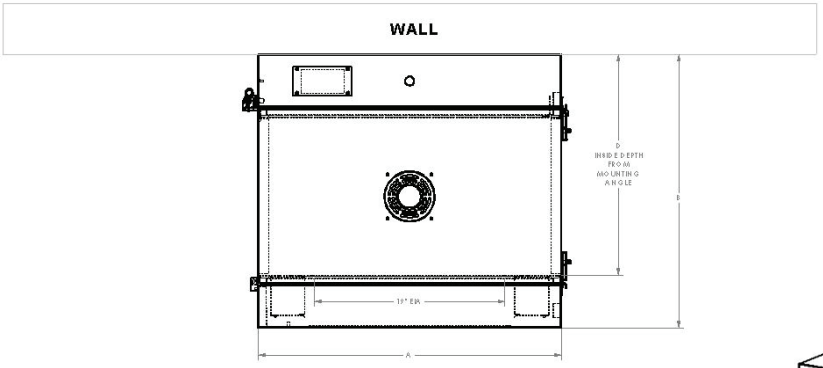

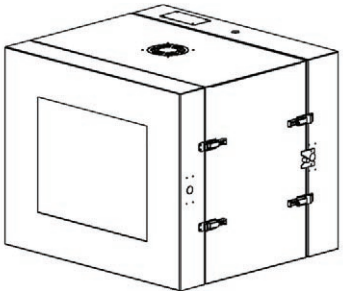

CTCWH-2128-DDSO-B
Shown with Lexan door

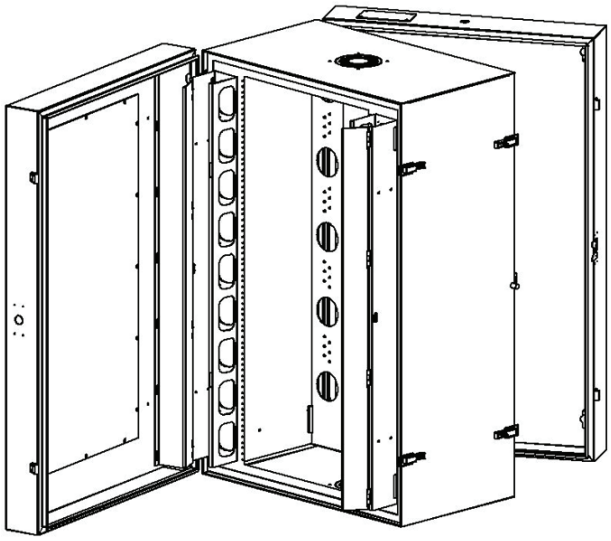

CTCWH-4428-DDSO-B
Shown with Lexan door